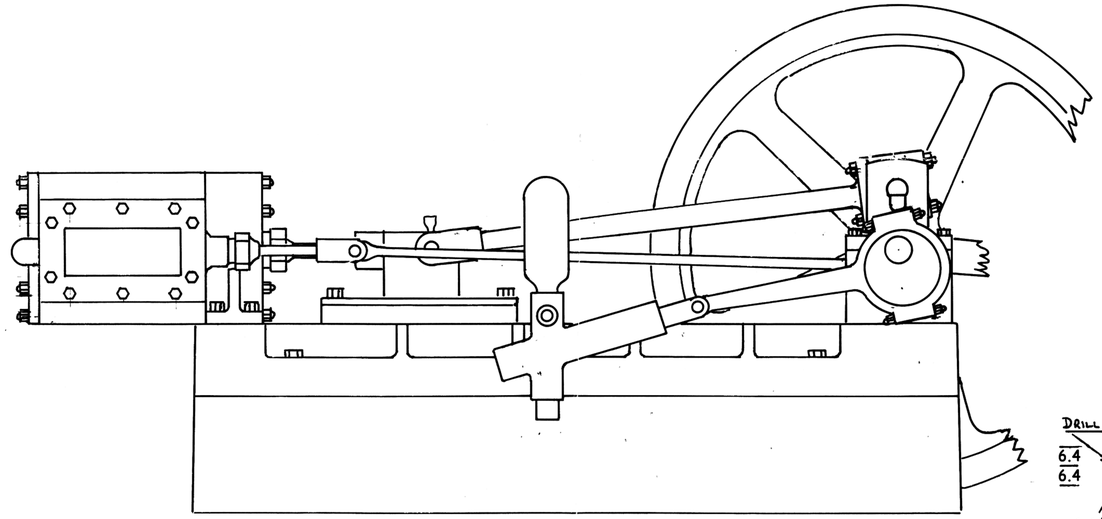

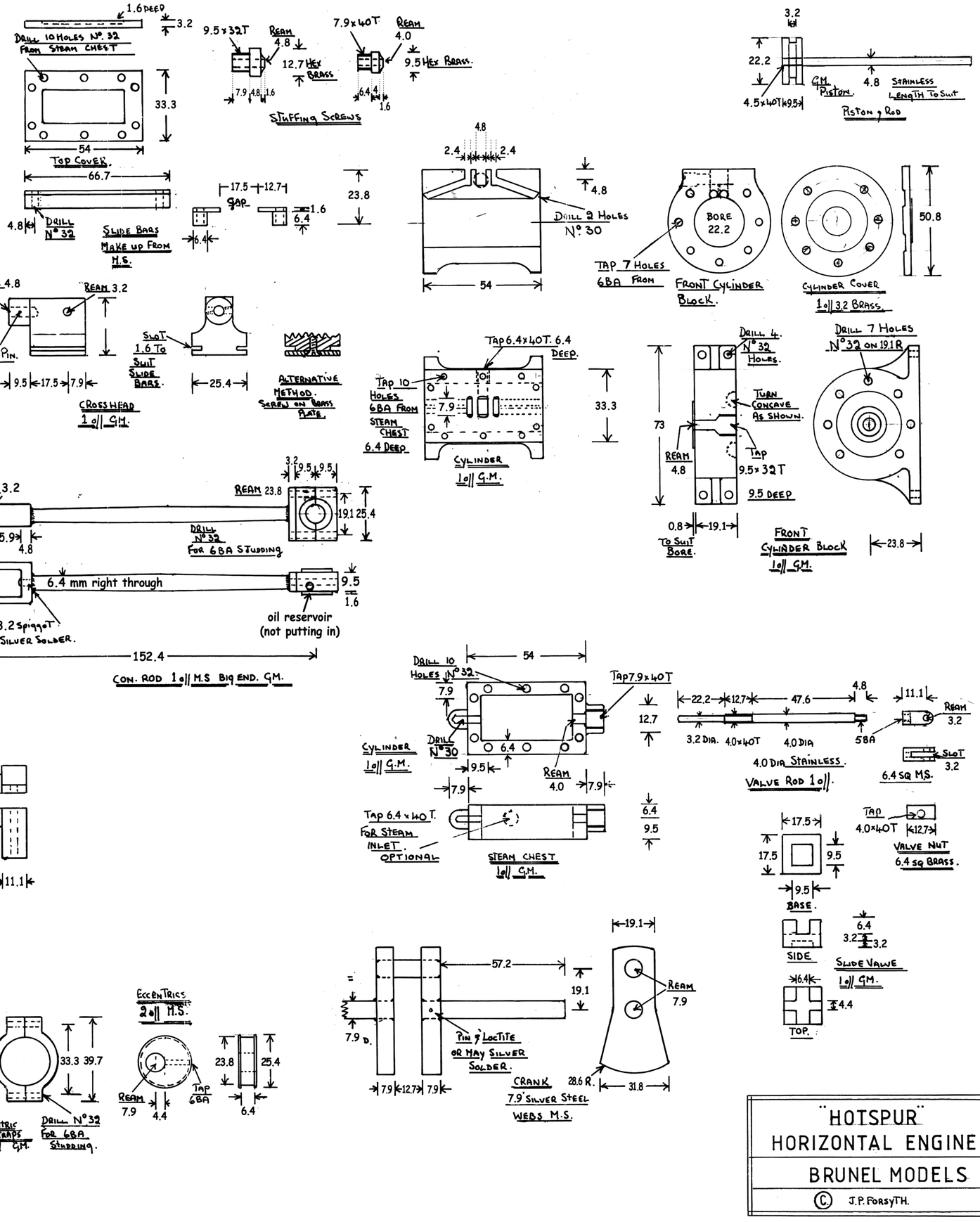

"HOTSPUR"
HORIZONTAL ENGINE
BRUNEL MODELS
© J.P. FORSYTH.